HOODS
TECHNICAL INFORMATION

MODEL NUMBER	DHD793X/GB/GW	DHD792X	DHD585X	DHD7000X
Hood type	Designer	Designer	Designer	Downdraft
MODEL NUMBER				
Number of fans	2	2	1	2
Control type	Touch control	Touch control	Remote	Touch control
Electronic speed control	•	•	•	•
Extraction & recirculation option	•	•	•	•
Saturation indicator(s)	•	•		•
Metal grease filter(s)	•	•	•	•
Hob illumination	Halogen x 2	Halogen x 2	Halogen x 1	Halogen x 2
Carbon filter(s)	Standard	Standard	Standard	Standard
Ducting diameter (mm)	120 – 150	120 – 150	120 – 150	120 – 150
PERFORMANCE DATA				
Fan speeds	4	4	4	4
Extraction rate m3/h maximum	800m3/h	800m3/h	900m3/h	900m3/h
Noise dB(A) level 1	50dB	50dB	34dB	34dB
INSTALLATION				
Minimum height from gas hobs (mm)	250	350	750	n/a
Minimum height from electric hobs (mm)	250	350	650	n/a
Minimum height from induction hobs (mm)	350	350	400	n/a
DIMENSIONS				
Maximum height (mm)	629	629	1270	320
Minimum height (mm)		550	790	8
Width (mm)	900	650	362	860
Depth (mm)	336	336	362	110
Packed H x W x D (mm)	480 x 975 x 755	615 x 725 x 717	900 x 840 x 440	880 x 1000 x 2600
Net weight (kg)	24	18	28	26.5
Gross weight (kg)	31	22	33	28
ACCESSORIES				
Carbon filters	71X0846	71X0846	71X0776	77X9377
ELECTRICAL CONNECTION				
Connection	220-240V / 50Hz	220-240V / 50Hz	220-240V / 50Hz	220-240V / 50Hz
Fuse rating (amps)	13	13	13	13

HOODS
TECHNICAL DRAWINGS

DHD793X/GB/GW

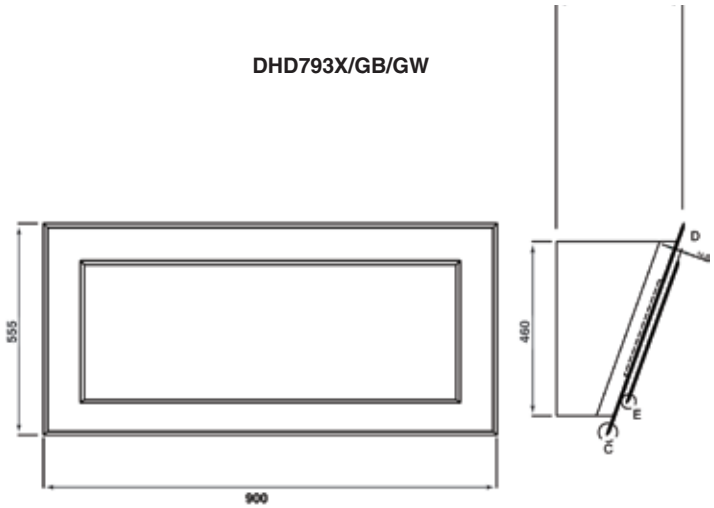

DHD792X

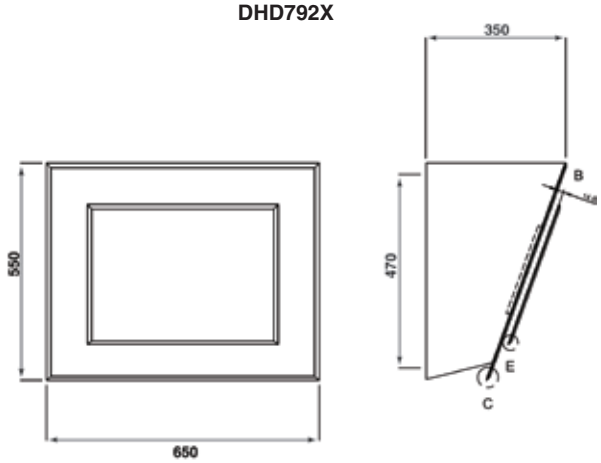

DHD585X

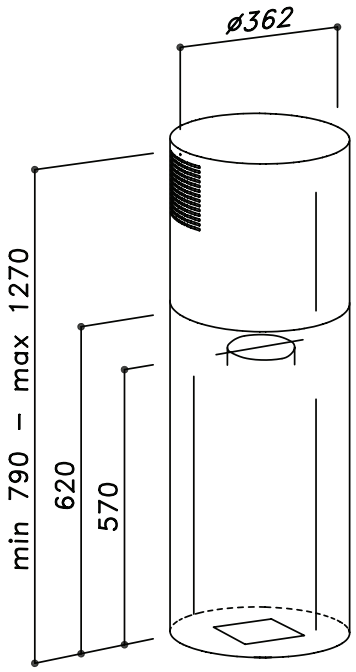

DHD7000X

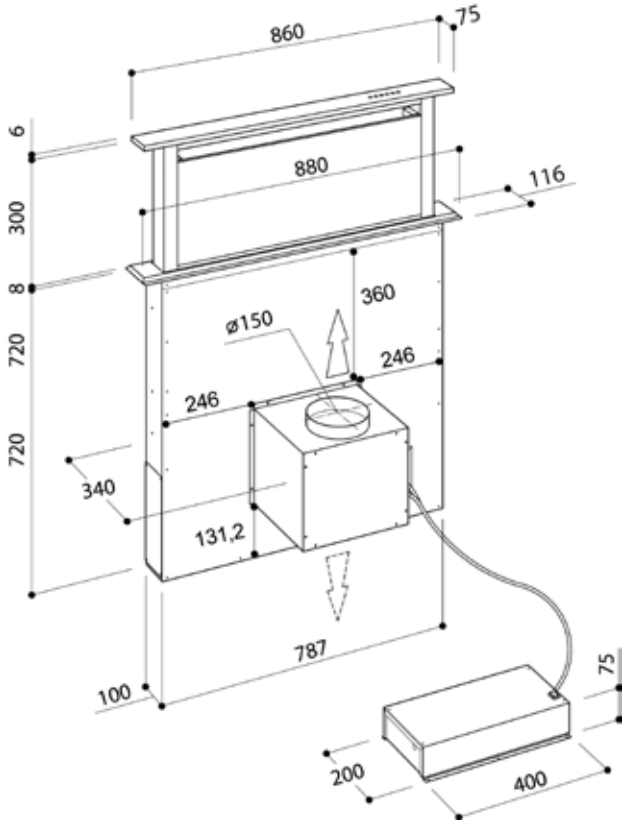

HOODS
TECHNICAL INFORMATION

MODEL NUMBER	DHD120XE1	DHD797X	DHD519XE1	DHD516XE1
Hood type	Range style	Glass canopy	Chimney	Chimney
MODEL NUMBER				
Number of fans	1	1	1	1
Control type	Electronic	Touch control	Electronic	Electronic
Electronic speed control	•	•	•	•
Extraction & recirculation option	•	•	•	•
Saturation indicator(s)	•	•		
Metal grease filter(s)	•	•	•	•
Hob illumination	Halogen x 4	Halogen x 2	Halogen x 2	Halogen x 2
Carbon filter(s)	Standard	Standard	Standard	Standard
Ducting diameter (mm)	120 – 150	120 – 150	120 – 150	120 – 150
PERFORMANCE DATA				
Fan speeds	4	4	4	4
Extraction rate m3/h maximum	1000m3/h	1100m3/h	800m3/h	800m3/h
Noise dB(A) level 1	49dB	49dB	45dB	45dB
INSTALLATION				
Minimum height from gas hobs (mm)	750	750	750	750
Minimum height from electric hobs (mm)	650	650	650	650
Minimum height from induction hobs (mm)	400	400	400	400
DIMENSIONS				
Maximum height (mm)	1017	993	1121	1121
Minimum height (mm)	665	608	769	769
Width (mm)	1200	900	900	600
Depth (mm)	500	500	500	500
Packed H x W x D (mm)	600 x 1240 x 380	590 x 980 x 530	600 x 940 x 380	600 x 640 x 380
Net weight (kg)	15	23	13	11
Gross weight (kg)	16	25	15	12
ACCESSORIES				
Carbon filters	74X2375	AK787AE1	79X8361	74X2375
ELECTRICAL CONNECTION				
Connection	220-240V / 50Hz	220-240V / 50Hz	220-240V / 50Hz	220-240V / 50Hz
Fuse rating (amps)	13	13	13	13

MODEL NUMBER	DHT316XE1	DHG397XP1	DHG377XP1	DHG356XP1	HN4646E1
Hood type	Telescopic	Canopy	Canopy	Canopy	Integrated
MODEL NUMBER					
Number of fans	2	4	2	2	1
Control type	Electronic	Electronic	Electronic	Electronic	Electronic
Electronic speed control	•	•	•	•	•
Extraction & recirculation option	•		•	•	•
Saturation indicator(s)				•	
Metal grease filter(s)	•	•	•	•	•
Hob illumination	Halogen x 2	Halogen x 2	Halogen x 2	Halogen x 2	Halogen x 2
Carbon filter(s)	Standard		Standard	Standard	Optional
Ducting diameter (mm)	123 – 150	200	150	150	123
PERFORMANCE DATA					
Fan speeds	3	4	4	4	4
Extraction rate m3/h maximum	480m3/h	1200m3/h	900m3/h	650m3/h	800m3/h
Noise dB(A) level 1	52dB	52dB	39dB	41dB	41dB
INSTALLATION					
Minimum height from gas hobs (mm)	750	750	750	750	750
Minimum height from electric hobs (mm)	650	650	650	650	650
Minimum height from induction hobs (mm)	400	400	400	400	400
DIMENSIONS					
Maximum height (mm)	260	314	304	245	380
Minimum height (mm)					
Width (mm)	559	760	700	520	598
Depth (mm)	280 – 430	400	285	285	270 – 480
Packed H x W x D (mm)	250 x 650 x 380	430 x 1020 x 570	325 x 795 x 325	345 x 605 x 325	440 x 660 x 325
Net weight (kg)	8	12	10	9.3	11.3
Gross weight (kg)	9	15.4	11.6	10.6	12.3
ACCESSORIES					
Carbon filters	75X3688	n/a	74X5376	74X6072	AH4068F1
ELECTRICAL CONNECTION					
Connection	220-240V / 50Hz	220-240V / 50Hz	220-240V / 50Hz	220-240V / 50Hz	220-240V / 50Hz
Fuse rating (amps)	13	13	13	13	13

HOODS
TECHNICAL DRAWINGS

DHD120XE1

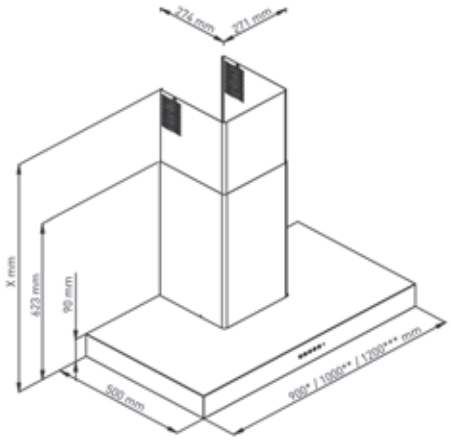

DHD797X

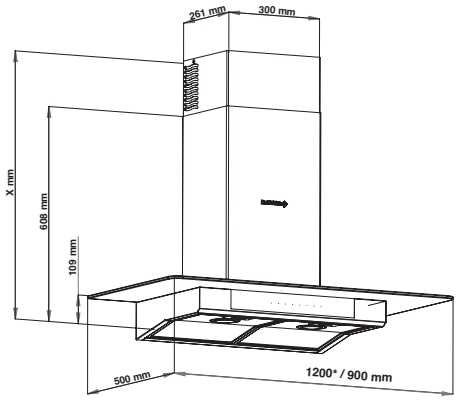

DHD519XE1 / DHD516XE1

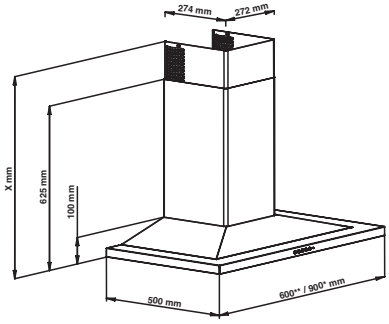

DHT316XE1

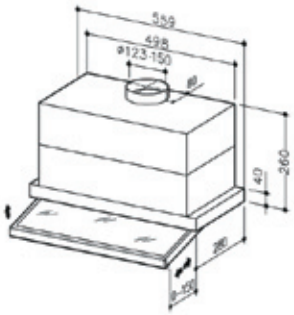

DHG397XP1

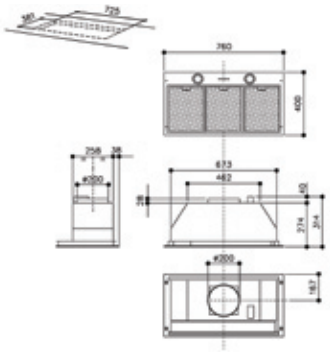

DHG377XP1

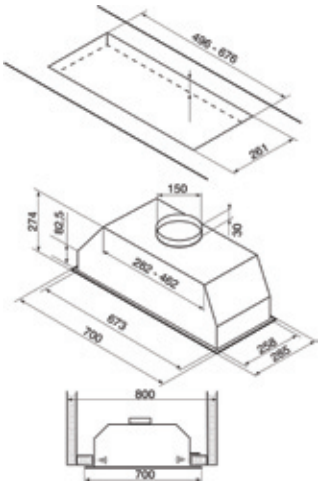

DHG356XP1

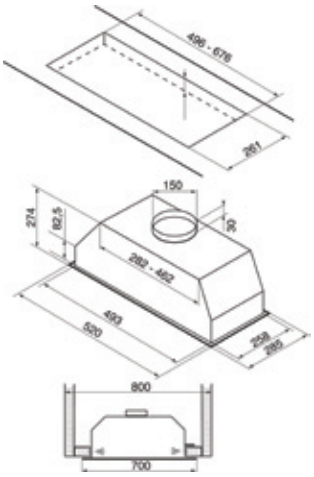
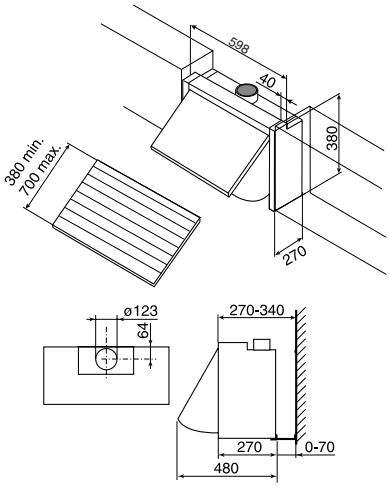
HN4646E1