FR GUIDE D'UTILISATION
DE BETRIEBSANLEITUNG
EN GUIDE TO INSTALLATION
ES MANUAL DE UTILICIÓN
IT MANUALE D'USO
NL GEBRUIKSAANWIJZING
PT GUIA DE UTILIZAÇÂO
CS PŘÍRUČKA K POUŽITÍ
PL INSTRUCJA OBSŁUGI
HU HASZNÁLATI UTASÍTÁS
EL ΕΓΧΕΙΡΙΔΙΟ ΧΡΗΣΗΣ
DA BRUGERMANUAL
SK PRÍRUČKA NA POUŽITIE
SV BRUKSANVISNING

Hotte décor
Dekor-Dunstabzugshaube
Decorative Hood
Campana extractora decorativa
Cappa arredamento
Designafzuigkap
Exaustor decorativo
Digestoř
Wyposażenie okapu
Szagelszívó berendezés
Διακοσμητικός Απορροφητήρας
Indretnings emhætte
Digestor
Spiskåpa för innebruk

DHD7000X

De Dietrich

(FR) Le symbole sur le produit ou son emballage indique que ce produit ne peut être traité comme déchet ménager. Il doit plutôt être remis au point de ramassage concerné, se chargeant du recyclage du matériel électrique et électronique. En vous assurant que ce produit est éliminé correctement, vous favorisez la prévention des conséquences négatives pour l'environnement et la santé humaine qui, sinon, seraient le résultat d'un traitement inapproprié des déchets de ce produit. Pour obtenir plus de détails sur le recyclage de ce produit, veuillez prendre contact avec le bureau municipal de votre région, votre service d'élimination des déchets ménagers ou le magasin où vous avez acheté le produit. Cet appareil est commercialisé en accord avec la directive européenne 2002/96/CE sur les dèchets del équipments èlectriques et èlctroniques (WEEE).

(DE) Das Symbol auf dem Produkt oder seiner Verpackung weist darauf hin, dass dieses Produkt nicht als normaler Haushaltsabfall zu behandeln ist, sondern an einem Sammelpunkt für das Recycling von elektrischen und elektronischen Geräten abgegeben werden muss. Durch Ihren Beitrag zum korrekten Entsorgen dieses Produkts schützen Sie die Umwelt und die Gesundheit Ihrer Mitmenschen. Umwelt und Gesundheit werden durch falsches Entsorgen gefährdet. Weitere Informationen über das Recycling dieses Produkts erhalten Sie von Ihrem Rathaus, Ihrer Müllabfuhr oder dem Geschäft, in dem Sie das Produkt gekauft haben. Dieses Elektrohaushaltsgerät ist entsprechend der EU-Richtlinie 2002/96/CE Über Elektro- und Elektronik - Altgeräte (WEEE).

(EN) The symbol on the product or on its packaging indicates that this product may not be treated as household waste. Instead it shall be handed over to the applicable collection point for the recycling of electrical and electronic equipment. By ensuring this product is disposed of correctly, you will help prevent potential negative consequences for the environment and human health, which could otherwise be caused by inappropriate waste handling of this product. For more detailed information about recycling of this product, please contact your local city office, your household waste disposal service or the shop where you purchased the product. This appliance is marked according to the European directive 2002/96/EC on waste electrical and electronic equipment (WEEE).

(ES) El símbolo en el producto o en su embalaje indica que este producto no se puede tratar como desperdicios normales del hogar. Este producto se debe entregar al punto de recolección de equipos eléctricos y electrónicos para reciclaje. Al asegurarse de que este producto se deseche correctamente, usted ayudará a evitar posibles consecuencias negativas para el ambiente y la salud pública, lo cual podría ocurrir si este producto no se manipula de forma adecuada. Para obtener información más detallada sobre el reciclaje de este producto, póngase en contacto con la administración de su ciudad, con su servicio de desechos del hogar o con la tienda donde compró el producto. Este electrodomestico està marcado conforme a la directiva Europea 2000/96/CE sobre los residuos de aparatos elèctricos y electrònicos (WEEE).

(IT) Il simbolo sul prodotto o sulla confezione indica che il prodotto non deve essere considerato come un normale rifiuto domestico, ma deve essere portato nel punto di raccolta appropriato per il riciclaggio di apparecchiature elettriche ed elettroniche. Provvedendo a smaltire questo prodotto in modo appropriato, si contribuisce a evitare potenziali conseguenze negative per l'ambiente e per la salute, che potrebbero derivare da uno smaltimento inadeguato del prodotto. Per informazioni più dettagliate sul riciclaggio di questo prodotto, contattare l'ufficio comunale, il servizio locale di smaltimento rifiuti o il negozio in cui è stato acquistato il prodotto. Questo elettrodomestico è marcato conformemente alla Direttiva Europea 2002/96/CE sui rifiuti da apparecchiature elettriche ed elettroniche (WEEE).

De Dietrich

FR	5
DE	16
EN	27
ES	37
IT	47
NL	57
PT	67
CS	77
PL	87
HU	97
EL	107
DA	119
SK	129
SV	139

Dear client,

*You have just purchased a **DE DIETRICH** range ventilation hood, and we thank you for your purchase.*
Our research and development teams have designed a new generation of appliances for you, which, because of their aesthetics, functionality, and technological evolution, are truly exceptional products representative of our design experience.

*Your new **DE DIETRICH** range ventilation hood will harmoniously suit your kitchen and will perfectly combine ventilation performance and ease of use. We simply want to offer you an excellent product.*

*Within the **DE DIETRICH** product line you will find a wide range of ovens, microwave ovens, cookers, washing machines, and fitted refrigerators that can be freely coordinated with your new **DE DIETRICH** range ventilation hood.*

Naturally, since our objective is the satisfaction of our clients towards our products, our customer service is at your total disposition to respond to any request and receive any useful suggestion (reference details at the end of the booklet).

*Visit our web site **www.dedietrich-elecromanager.com** where you will find our latest innovations as well as all useful information.*

DE DIETRICH
The new objects of value

Constantly seeking to improve our products, we reserve the right to modify their technical, functional, or aesthetic characteristics as they evolve.

⚠ ***Important: Before activating the appliance, read the installation and usage manual carefully to familiarise yourself more quickly with its operation.***

www.dedietrich-electromenager.com

CONTENTS EN

1 / TO THE ATTENTION OF THE USER
- Safety instructions 29
- Description of the applianc 30

2 / INSTALLING THE HOOD
- Mounting the hood 32
- Removal of the filter cartridge 32
- Mounting the filter cartridge 32
- Electrical hook-up of the hood 33

3 / HOW THE HOOD WORKS 34

4 / CLEANING THE HOOD 35

5 / OPERATIONAL ANOMALIES 36

6 / AFTER SALES SERVICE 36

1/ TO THE ATTENTION OF THE USER EN

Important: keep these instructions for use with the appliance. If the appliance should be sold or passed on to others, make sure that the instructions are passed on with it. We thank you for taking note of these suggestions before installing and using the appliance. They have been written for your personal safety and the safety of others.

- SAFTEY INSTRUCTIONS

These hoods have been designed for personal use in the home. The appliance must be used by adults.Take care that children do not touch the appliance and do not use it as a toy. Make sure that children do not operate the controls.

- Upon delivery of the appliance, remove the packing material yourself or have it removed immediately. Check the overall condition of the appliance. Note any observations on the delivery bill and keep a copy. Your appliance is designed for normal use in the home. It is not designed for commercial or industrial use, or for purposes other than those for which it was designed.

- After having finished the installation of the downdraft, plug-in the unit, lift it and remove the blocking panel (Fig. 1a-1b-1c). Afterwards please open the panel (Fig. 2a-2b) and remove the grease filter PVC protection (Fig. 3).

- Do not ever modify, or attempt to modify, the design characteristics of this appliance. This could result in danger.
Repairs must be performed only by an authorised specialist.
Always disconnect the hood before carrying out cleaning or maintenance operations.
- Adequately ventilate the area in case the hood is activated simultaneously with other appliances powered from non-electrical sources so that the hood does not ventilate these combustion fumes.
- It is prohibited to cook food over open flames or operate gas hobs without pots or pans on them under the hood itself (the flames sucked into the hood might damage the appliance).
- Deep frying under the appliance must be done under constant supervision as hot oils and fats may ignite.
Respect the guidelines for cleaning and replacement of the filters. Accumulated deposits of grease are a fire hazard.
- The use of combustible materials (wood, charcoal, etc…) on the hobs is not permitted.
Never use steam or high-pressure devices for cleaning your hood (regulations regarding electrical safety).

Constantly seeking to improve our products, we reserve the right to modify their technical, functional, or aesthetic characteristics as they evolve.

In order to find the notes regarding your appliance easily in the future, we advise you to collect them on the page “After sales service and customer relations”. (This page also explains where to find them on your appliance).

Attention:
If your kitchen is heated by a device hooked up to a chimney (i.e., a wood stove), you should install the recirculation mode of the hood. Never use the hood without the filter cartridges. Furthermore, you must province adequate ventilation to the area when your kitchen hood is used at the same time as devices that operate with gas or other combustible materials.

1/ TO THE ATTENTION OF THE USER EN

- DESCRIPTION OF THE APPLIANCE

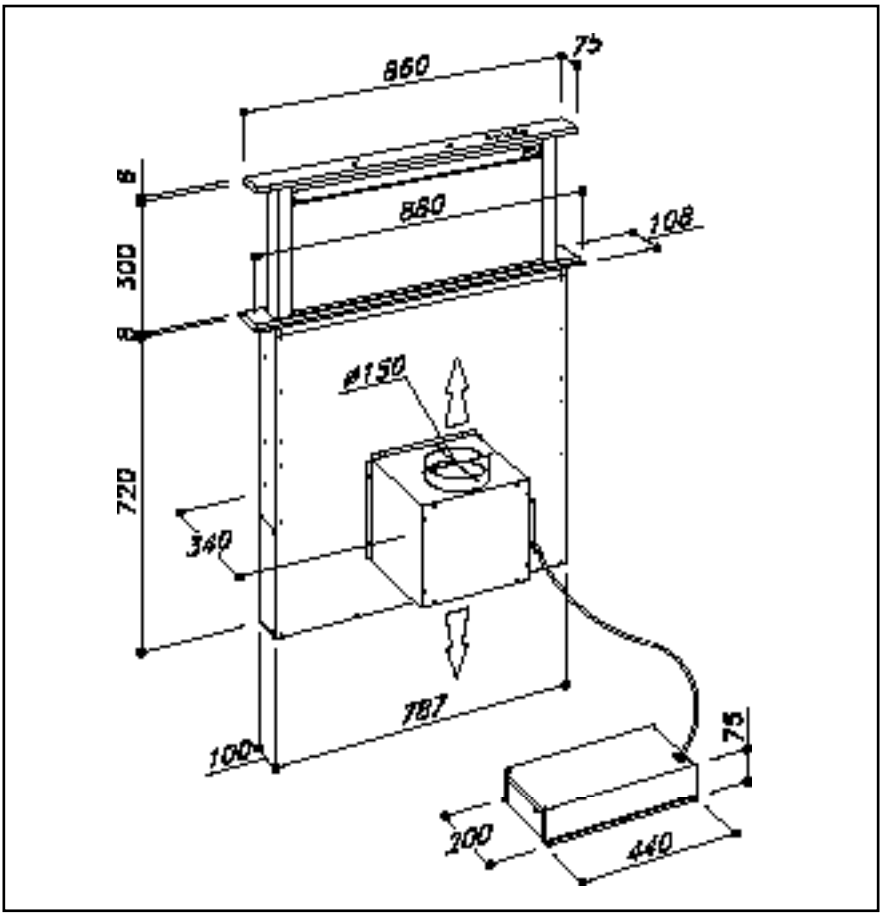

2/ INSTALLING THE HOOD

EN

1) For a good performance the Downdraft must be properly installed.
2) At the rear of the cooktop make a rectangular opening of mm 90x100 (Fig. 13).
3) If you would like to place the Downdraft very close to cooktop, connect the opening of the Downdraft to the one of the cooktop.
4) Before making the opening, check that there are no structural or other parts inside the cabinet, where the appliance is to be placed, which could hinder a proper installation. Check that the dimensions of the Downdraft and the ones of the cooktop are compatible with the cabinet so that the installation can be carried out properly.
5) Put the Downdraft in the opening, inserting it from above as shown in Fig. 5.
6) The upper edge of the Downdraft must fit perfectly the cooktop.
7) Fix the Downdraft inside the cabinet. According to the dimensions of the cabinet and of the air outlet duct, use the provided fixing brackets.
Attention: do not make any additional openings on the appliance in order to avoid to damage the internal sliding and electrical components.
8) In the version of the Downdraft equipped with motor, install the motor group adjusting the air evacuation direction as required, either downwards or upwards (Fig. 11). After installing the motor, connect the air ducts.
9) Put the metallic box containing the electronic components in a place easy to be reached if a technical assistance is needed Fig. 7). Connect the electrical connectors of the box to the Downdraft (Fig. 7).
10) Power the appliance.

Downdraft calibration
After the downdraft has been installed, the aspiration panel must be calibrated. This operation is necessary to regulate the power exstraction of the aspiration panel. Connect the product to the power line, making sure that **it is conformed to the supply voltage indicated on the technical data tag. Pushing the ON/1 button (fig. 8)** the aspiration panel rises. After it has reached a height of 180mm from the cooketop, press OFF, to stop the extraction then the Timer (fig. 8) and after 2 sec. the OFF button.
The downdraft will carry out the calibration of its aspiration panel rising and retracting for some centimeters. During this phase, the buttons on the pushbutton control panel blink. At the end of the calibration, the aspiration panel get back to the previous position and the button end to blink. Wait until the aspiration panel stops moving before re-activating the extraction.

UTILISATION
This product is intended to extract fumes, fats, and steam from cooking. It has been designed and made for use either in the suction or filter versions.

VERSION EVACUATION exterieure
The hood is equipped with an air outlet (Fig. A FIGURE 5) to convey smoke outwards (the flue pipe and fixing flange are not supplied).

Check valve blockage
Warning: Before connecting the air exhaust hose, make sure that the check valves are free to turn over freely.

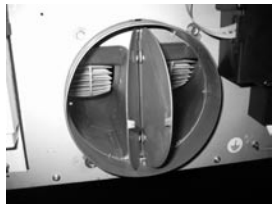

In filtering application that the stop valve doesn't permit the entrance of wind and exhausted air.

Filtering version
In the case an exhausting hole is not possible, the hood can be used in filtering version. For this mode charcol filters are to be fitted inside the hood. Filtered air will be evacuated in the kitchen trough a duct that conveys the air on a side of the cabinet (picture 7 bis).

ELECTRIAL HOOK UP
This appliance conforms to the European Directives 2006/95/EC (Low Voltage Directive) and 2004/108/EC (Electromagnetic Compatibility).
When you install the appliance and carry out maintenance, it must be unplugged from the power source or the fuses must be disengaged or removed. Electrical hook up must be carried out before the appliance is installed in the cabinet.
Check that:
- the power source is sufficient,
- power cords are in good condition,
- The diameter of the cables conforms to installation regulations.

- MOUNTING THE HOOD

⚠ Installation must conform to the regulations in force regarding the ventilation of enclosed environments. In France, these regulations are container in the DTU 61.1 of the CSTB. In particular, discharged air must not be channelled into a conduit used for exhaust discharge or discharge from devices that operate with gas or other combustible materials. The use of unused conduits is not permissible without the approval of a qualified technician.

The product can be installed at a distance of less than 65 cm from the cook top, according to the standard EN60335-2-31:1997 and subsequent amendment R061-001-2000.

-REMOVAL OF THE FILTER CARTRIDGE
-MOUNTING THE CARBON FILTER

The removal and fitting of the grease and carbon filters need to be carried out with the downdraft in the open position. To open the downdraft, push the ON/1 key. Then remove the front panel, pushing the bottom part of each side at the same time. The panel will rotate forwards to make it possible to access the grease filters (Fig. 9). Remove the grease filters to access the carbon filters (Fig. 10). The carbon filters should be changed according to the frequency of downdraft use and in any case, once every 6 months.

- ELECTRIAL HOOK UP OF THE HOOD

WARNING: The electronic board for the controls needs to be installed beneath the work top, close to the body of the hood and at a minimum distance of 65 cm from all substances or ducting for flammable substances (gas pipes or ducting for specific liquids)

USEFUL ADVICE: We recommend fitting the electronic board at a height of at least 10 cm from the ground and at a suitable distance from all heat sources (e.g., the side of an oven or cook top).

This appliance is fitted with an H05 VVF 3 conductor, 0.75 mm2 (neutral, phase, and ground) power cable. This can be hooked up to a 220 - 240 V mono-phase electrical network by way of a CEI 60083 regulation power socket that must remain accessible after installation, in conformity to installation regulations.
We decline all responsibility in case of accident caused by a lack of ground connection or incorrect ground connection. The fuse used must be 10 or 16 A. If the power cable is damaged, call the after-sales service to avoid any risk.

Attention
If the hood presents some form of anomaly, unplug the appliance or remove the fuse corresponding to the appliance's power line.

3/ HOW THE HOOD WORKS EN

OFF switch: (Fig. 8) It is used to close the aspiration panel completely or to position it at intermediate heights at least mm 180 above the cooktop. While closing the aspiration panel keeps on working at the speed set up to the height of mm 180 from the cooktop. Below this height the aspiration function is automatically cut out.

On switch/+: (Fig. 8) It is used to extract the aspiration panel up to the maximum height of mm. 300 and to set automatically the first aspiration speed when reaching the height of mm 180 from the cooktop.
When pressing the button again after reaching this height, the aspiration motor speed can be encreased.
If the aspiration panel is positioned at an intermediate height between mm 180 and mm 300, the aspiration panel can start raising again by pressing first the OFF switch and then the On/+. Switch.

Leds: (Fig. 8) The different speed levels are indicated by blue leds. (1. Speed level corresponds to the led down on the left).

MINUS SWITCH: (Dis. 8) it is working only if the position reached by the aspiration panel is higher than mm 180 from the cooktop. It is used to decrease the aspiration motor speed.

TIMER SWITCH: (Fig. 8) : it is used to stop automatically the aspiration system and to close automatically the aspiration panel ten minutes it has been set.

Other functions:
- After 30 hours of appliance operation, the pushbutton panel indicates saturation of the grease filters by the buttons flashing. To reset, press the timer button.
- After 4 hours of continuous operation from the last setting, the appliance turns off and closes automatically.
- When the front panel is removed for cleaning and maintenance operations, all the electronic aspiration and movement functions are locked.
- Anti pinching safety device: if anything is obstructing the closure operation of the downdraft, the operation will stop and the downdraft will move up again.

4/ CLEANING THE HOOD

EN

Careful maintenance helps guarantee proper operation and good results from an appliance over time.

⚠ **The hood must be unplugged from the electrical power source, both by unplugging the appliance from the socket as well as de-activating the breaker, before removing the metal filters. After cleaning, you must replace the metal filters as outlined in the instructions.**

MAINTENANCE	HOW TO PROCEED?	ACCESSORY PRODUCTS TO USE
External surfaces and accessories	**Do not use metallic scrubbers, abrasive products, or hard brushes.**	To clean the external surfaces of the hood and the light housing screen use only commercially available household detergents diluted in water. Then rinse with clean water and dry with a soft cloth.
Filter cartridge	After 30 hours' operation, the button pad will signal that the grease filter is saturated by flashing the 4 speed LEDs. Press the timer button to reset ◴.	The grease filters can be washed by hand or in the dishwasher. These filters need to be cleaned on a regular basis because otherwise they may present a fire risk. Refit the grease filters and front panel, making sure that the panel is properly fitted at the sides so that it does not cause the downdraft to stop operating.
Active carbon filter	In the recirculation mode, you must substitute the active carbon filter periodically. To remove the fibre panel you must first remove the anti-grease grill and pull the plastic knob on the panel itself, removing it from its housing. To replace the active carbon filter, do the reverse. Replace the used carbon filter on an average of every six months.	

To preserve the appliance we advise you to use Clearit maintenance products.

clearit

Clearit The experience of professionals at your service

Clearit offers appropriate professional products and solutions for the day-to-day maintenance of your household appliances and kitchens. You will find these products on sale at your usual retailer together with an entire line of accessories and complementary products.

5/ OPERATIONAL ANOMALIES EN

SYMPTOM	SOLUTION
The hood does not work...	Check that: • there is not a power outage. • a specific speed has actually been selected.
The hood has low output...	Check that: • the motor speed selected is sufficient for the quantity of fumes steam present. • the kitchen is ventilated well enough to allow for air intake. • the carbon filter is not worn (hood n recirculation mode).
The hood stops in the middle of operation	Check that: • there is not a power outage. • the omnipolar device has not tripped.

6/ AFTER SALES SERVICE EN

Any maintenance on your equipment should be undertaken by:
- either your dealer,
- or another qualified mechanic who is an authorized agent for the brand appliances.

When making an appointment, state the full reference of your equipment (model, type and serial number). This information appears on the manufacturer's nameplate attached to your equipment.

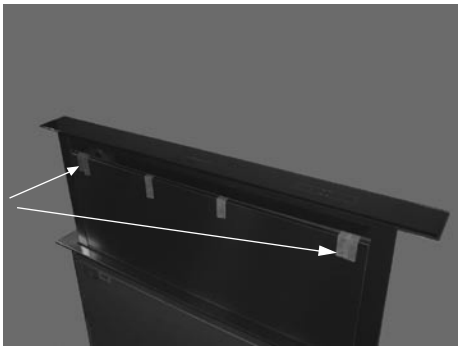

1

2

3

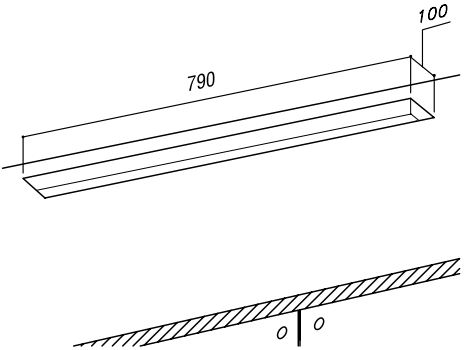

4

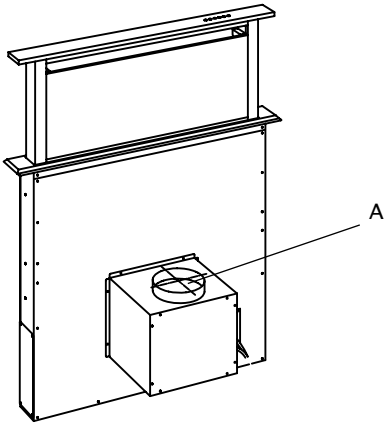

5

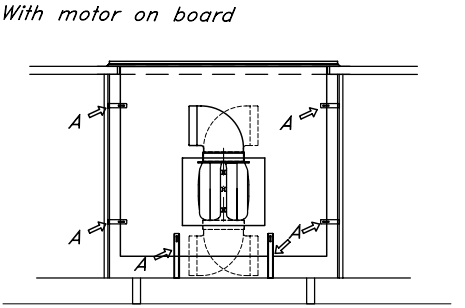

6

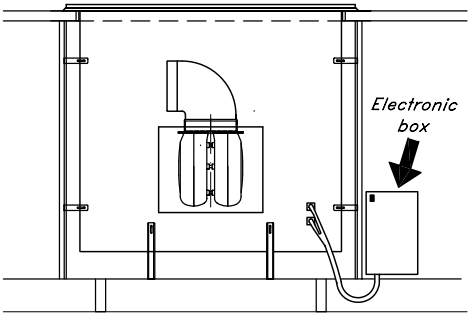

7

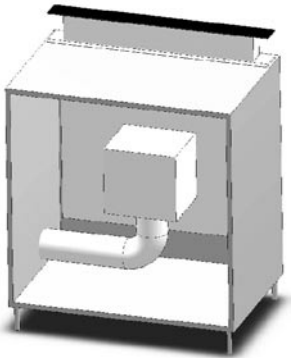

7bis

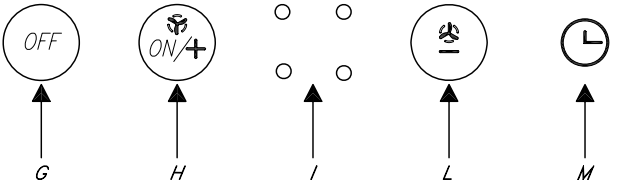

8

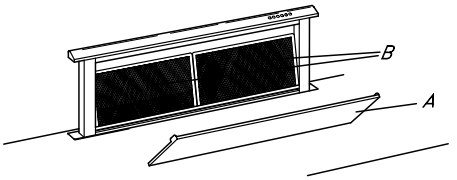

9

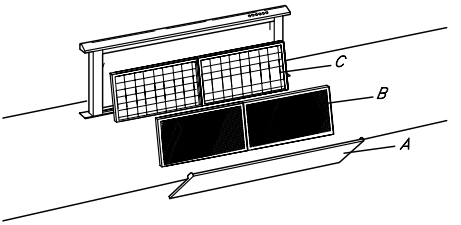

10